EBC (Emergency Breakaway Coupler)

Land loading arms

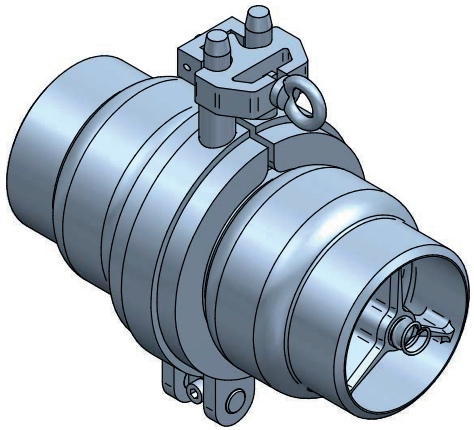

- Minimal pressure loss
- Developed in stainless steel
- Quick release coupling with clamps
- Cable actuated

Dimensions

- DN50 (2″)
- DN80 (3″)
- DN100 (4″)

Connections

- Welding ends BW
- Flanges DIN or ANSI

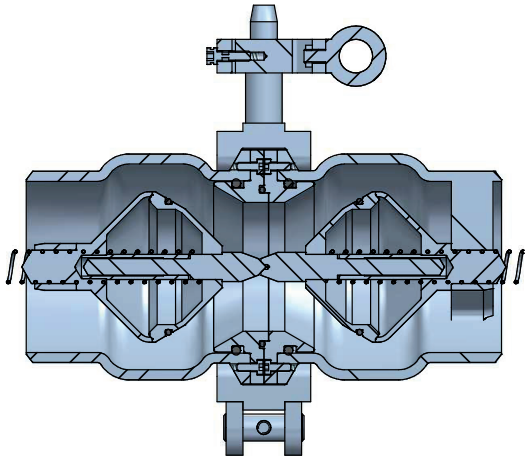

Wiese Europe bvba
Smederijstraat 16
2960 Brecht
Belgium

+32 3 633 16 10
info@wiese-europe.com
www.wiese-europe.com

WIESE EUROPE